VITRUM 3.0

VITRUM 3.0 7W WHITE 20° 4000K 24V HC 10M

Cod: **VIT03FCM102M00**

IdroSkud® protection system
- polarity reversal protection
- voltage spikes protection
- water infiltration protection

Protection class III
Designed to be supplied from a separated extra-low voltage (SELV) power supply

IP 66
Protected against powerful power jets, 100 liters per minute

IP 68
Protected against continous immersion up to 3 meters

IK 10
Protected against impact of 20 J

Walk-over
Fixture design to withstand a static load up to 5 kN

CX - Extreme
corrosion resistance level ISO 9223

Mizar warranty
5 years warranty

Technical description

Fully flush inground luminaire, walk-over , suitable for outdoor and underwater environments (IP66/IP68) with operating temperature range: -20°C / +50°C. Its special feature is that it has a tempered glass screen without metal frame, opal, with black screen-printed edge. The body is made of black anodized anticorodal aluminum. The light source consists of a single 7W power Led chip powered at 24Vdc constant voltage with integrated driver. The minimalist design makes it ideal as a lighting fixture for elegant indoor and outdoor environments, as well as for high-humidity situations (spas, wine cellars). The source is set back for greater visual comfort. Color rendering index CRI > 90. Vitrum is equipped with IdroSkud® system to protect electronic components from voltage spikes, polarity reversal and water infiltration. There are installation accessories (draining, watertight and plasterboard outercase). The product must be combined with a power supply to ensure its operation. The power supply must be ordered separately. The amount of luminaires that can be connected to a single power supply varies depending on the type of installation. It is up to the installer to verify the possible voltage drop by evaluating the distance between the product and the power supply.

MIZAR is a brand of REER SPA
Via Carcano 32 - 10153 - Torino, Italy
Tel: +39 011 9969833 - Mail: info@mizar.it - www.mizar.it

Lighting data

Source type	single chip power LED
CCT	4000K
CRI	> 90
MacAdam (SDCM)	2
Source lumen output (lm)	445
Luminaire lumen output (lm)	347
Light emission	Medium
Beam angle	20°

Photobiological risk	RG0
ULR	100.00%
BUG Rating	B0 U3 G0
CIE Flux Code	0 0 0 0 100
LED lifetime	L80 B10 50.000h
Efficiency class	This product contains a light source of energy efficiency class (EU2019/2015): G

Mechanical data

Diameter (mm)	85
Height (mm)	108
Weight (g)	632
IP Rating	IP66 / IP68
IK rating	IK10
Finishing colour	White silk-screen
Body material	Anodized aluminum anticorodal 6082
Diffuser material	Extraclear tempered glass
Diffuser thickness (mm)	10
Class ISO 9223	CX

Optic type	Technopolymer TIR Lens
Optical optional	Honeycomb
Maximal working temperature	+50° C
Minimal working temperature	-20° C
Maximal static load (kN)	5
Walk-over	Yes
Driver-over	No
Maximal surface temperature	+50° C
Areas EN 60598-2-13	A1 / A2

Electrical data

Nominal power (W)	7
Power supply (input power type)	Costant voltage - 24V
Ballast	Remote
Insulation class	III
Dimmable	Yes
Power cable type	H05RN - F 2x0,75 mm²
Power cable length	10 m

Electrical connection	Parallel connection
Idroskud® protection	Yes
Inverse polarity protection	Yes
Voltage spikes protection	Yes

Photometry

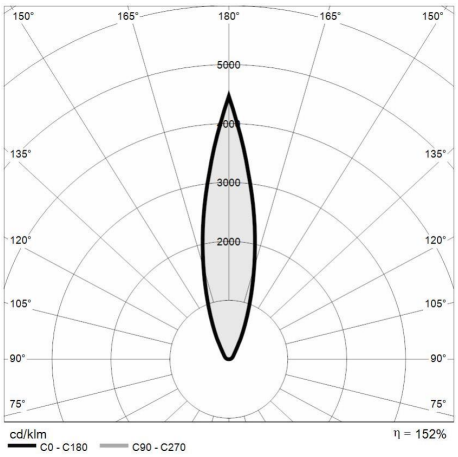

Technical drawing

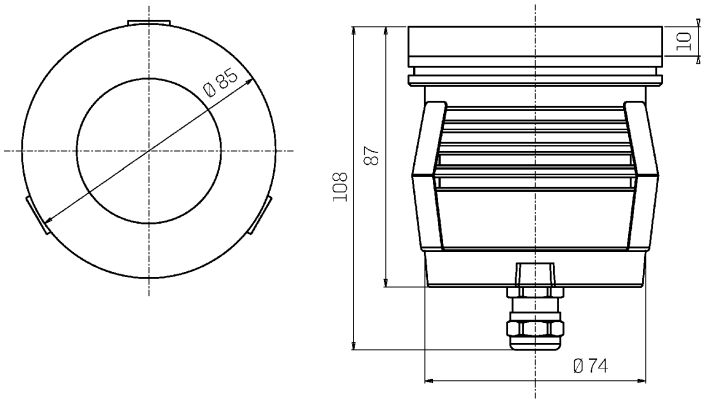

Accessories

DRAINING OUTERCASE

Outercase draining VITRUM 3

Cod: VITZZZ002

SLIM DRAINING OUTERCASE

Outercase slim VITRUM 3

Cod: VITZZZ005

PLASTERBOARD RING

Plasterboard ring VITRUM 3

Cod: VITZZZ008

EXTRACTION KIT

Suction cup for VITRUM 3

Cod: VITZZZ011