QUANTUM 1.2

QUANTUM 1.2 6W CORTEN 10° 2700K 220V HC

Cod: **QUA01CCS1CTZ00**

Protection class II
Double insulated electrical appliance

IP 65
Protected against water jets

IK 08
Protected against impact of 5 J

High temperatures
Design to withstand temperatures up to +50° C

C5 - Very high
corrosion resistance level ISO 9223

Mizar warranty
5 years warranty

Technical description

Double-emission fixture for wall mounting, suitable for outdoor environments (IP65), with wide operating temperature range: -20°C / +50°C. The body is made of die-cast aluminum protected by polyester epoxy paint to ensure corrosion resistance of 1500 hours in salt spray. The light source is a single 6W Power Led chip powered by 220Vac (integrated power supply). The luminous flux and distinctive design make it ideal for illuminating facades and architectural details. Color rendering index CRI > 90. Optional anti-glare (honeycomb) is provided.

MIZAR is a brand of REER SPA
Via Carcano 32 - 10153 - Torino, Italy
Tel: +39 011 9969833 - Mail: info@mizar.it - www.mizar.it

Lighting data

Source type	single chip power LED	Photobiological risk	RG0
CCT	2700K	ULR	50.00%
CRI	> 90	BUG Rating	B0 U1 G0
MacAdam (SDCM)	3	CIE Flux Code	0 0 0 0 100
Source lumen output (lm)	472	LED lifetime	L80 B10 50.000h
Luminaire lumen output (lm)	272	Efficiency class	This product contains a light source of energy efficiency class (EU2019/2015): F
Light emission	Narrow		
Beam angle	10°		

Mechanical data

Width (mm)	55	External screws material	Stainless steel 316L (A4)
Length (mm)	77	Diffuser material	Extraclear tempered glass
Height (mm)	164	Diffuser thickness (mm)	5
Weight (g)	600	Class ISO 9223	C5
IP Rating	IP65	Optic type	Technopolymer TIR Lens
IK rating	IK06	Optical optional	Honeycomb
Type of finishing	Protective primer followed by epoxy and polyester paint	Maximal working temperature	+50° C
Finishing colour	Corten	Minimal working temperature	-20° C
Body material	Die-cast aluminum EN AB46100		

Electrical data

Nominal power (W)	6	Dimmable	No
Power supply (input power type)	220V AC 50/60 Hz	Power cable length	Not pre-wired
Ballast	Integrated		
Insulation class	II		

Photometry

10°

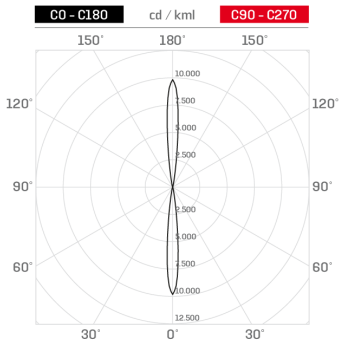
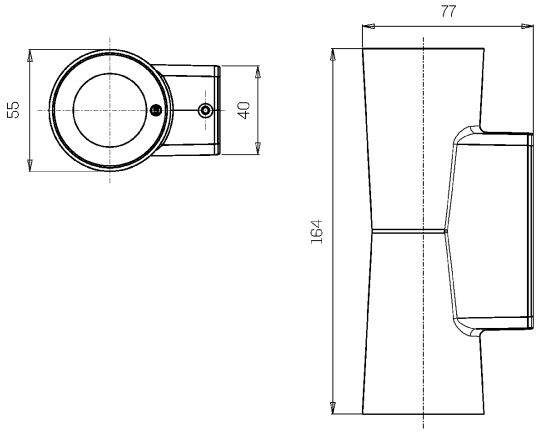
Technical drawing