OCEANO 2.1

OCEANO 2.1 2W AL-AL 36° 3000K 24V 1,5M

Cod: **CEA03DCM000C00**

IdroSkud® protection system
- polarity reversal protection
- voltage spikes protection
- water infiltration protection

Protection class III
Designed to be supplied from a separated extra-low voltage (SELV) power supply

IP 66
Protected against powerful power jets, 100 liters per minute

IP 68
Protected against continous immersion up to 3 meters

IK 07
Protected against impact of 2 J

High temperatures
Design to withstand temperatures up to +50° C

Walk-over
Fixture design to withstand a static load up to 5 kN

C5 - Very high
corrosion resistance level ISO 9223

Mizar warranty
5 years warranty

Technical description

Inground luminaire, walk-over, suitable for outdoor environments (IP66/IP68), with operating temperature range: -20°C / +50°C. To provide maximum versatility of application, the body can be made of aluminum or steel; the frame, aluminum, steel or brass. The light source consists of a single 2W power Led chip powered at 24V constant voltage with integrated driver. The luminous flux makes it ideal for tracing pedestrian paths or achieving a starry ceiling effect, thanks to the different emission angles. The source is set back for greater visual comfort. Color rendering index CRI > 90. Oceano is equipped with IdroSkud® system to protect electronic components from voltage spikes, polarity reversal and water infiltration. There are optionals for anti-glare (honeycomb) and installation accessories (draining and waterproof outercase and spring for ceiling attachment). The product must be combined with a power supply to ensure its operation. The power supply must be ordered separately. The amount of luminaires that can be connected to a single power supply varies depending on the type of installation. It is up to the installer to verify the possible voltage drop by evaluating the distance between the product and the power supply.

MIZAR is a brand of REER SPA
Via Carcano 32 - 10153 - Torino, Italy
Tel: +39 011 9969833 - Mail: info@mizar.it - www.mizar.it

Lighting data

Source type	single chip power LED
CCT	3000K
CRI	> 90
MacAdam (SDCM)	2
Source lumen output (lm)	157
Luminaire lumen output (lm)	94
Light emission	Medium
Beam angle	36°

Photobiological risk	RG0
ULR	100.00%
BUG Rating	B0 U1 G0
CIE Flux Code	0 0 0 0 100
LED lifetime	L80 B10 50.000h
Efficiency class	This product contains a light source of energy efficiency class (EU2019/2015): F

Mechanical data

Width (mm)	40
Length (mm)	40
Height (mm)	76
Weight (g)	102
IP Rating	IP66 / IP68
IK rating	IK07
Shape	Square
Finishing colour	Aluminium / Aluminium
Frame material	Anodized 20u aluminum anticorodal 6082, Anodized 20u aluminum anticorodal 6082
Body material	Anodized 20u aluminum anticorodal 6082
External screws material	Stainless steel 316L (A4)
Diffuser material	Extraclear tempered glass

Diffuser thickness (mm)	6
Class ISO 9223	C5
Optic type	Technopolymer TIR Lens
Optical optional	None
Maximal working temperature	+50° C
Minimal working temperature	-20° C
Maximal static load (kN)	5
Walk-over	Yes
Driver-over	No
Maximal surface temperature	+50° C
Areas EN 60598-2-13	A1 / A2

Electrical data

Nominal power (W)	2
Power supply (input power type)	Costant voltage - 24V
Ballast	Remote
Insulation class	III
Dimmable	Yes
Power cable type	H05RN - F 2x0,75 mm²
Power cable length	1,5 m

Electrical connection	Parallel connection
Idroskud® protection	Yes
Inverse polarity protection	Yes
Voltage spikes protection	Yes

Photometry

36°

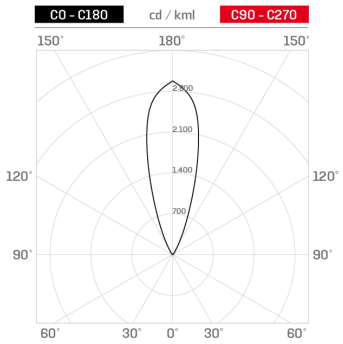

Technical drawing

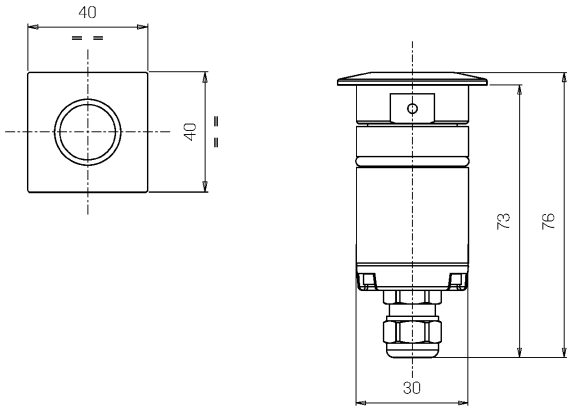

Accessories

DRAINING OUTERCASE

Outercase draining OCEANO 2

Cod: CEAZZZ003

SLIM DRAINING OUTERCASE

Outercase draining slim OCEANO 2

Cod: CEAZZZ004

SLIM WATER-PROOF OUTERCASE

Outercase waterproof slim OCEANO 2

Cod: CEAZZZ005

SPRING FOR CEILING MOUNTING

Spring for ceiling mounting OCEANO 2

Cod: CEAZZZ015

NOT DIMMABLE POWER SUPPLY

Power supply 220/240 50/60Hz ON/OFF 24V 14,4W IP67

Cod: MID0019

NOT DIMMABLE POWER SUPPLY

Power supply 220/240 50/60Hz ON/OFF 24V 36W IP67

Cod: MID0020

DIMMABLE POWER SUPPLY

Power supply 220/240 50/60Hz 24V 24W IP67 DALI

Cod: MID0021

MIZAR is a brand of REER SPA
Via Carcano 32 - 10153 - Torino, Italy
Tel: +39 011 9969833 - Mail: info@mizar.it - www.mizar.it