# OCEANO 3.1

## OCEANO 3.1 3W AL-AL 40° 4000K 24V HC 10M

Cod: **CEA05FCL100M00**

**IdroSkud® protection system**
- polarity reversal protection
- voltage spikes protection
- water infiltration protection

**Protection class III**
Designed to be supplied from a separated extra-low voltage (SELV) power supply

**IP 66**
Protected against powerful power jets, 100 liters per minute

**IP 68 up to 10m**
Protected against continous immersion up to 10 meters

**IK 10**
Protected against impact of 20 J

**High temperatures**
Design to withstand temperatures up to +50° C

**Walk-over**
Fixture design to withstand a static load up to 5 kN

**C5 - Very high**
corrosion resistance level ISO 9223

**Mizar warranty**
5 years warranty

## Technical description

Inground luminaire, walk-over, suitable for outdoor and underwater environments up to 10 m (IP66/IP68), with operating temperature range: -20°C / +50°C. To provide maximum versatility of application, the body can be made of aluminum or steel; the frame, aluminum, steel or brass. The light source consists of a single 3W power Led chip powered at 24V constant voltage with integrated driver. The luminous flux makes it ideal for marking pedestrian paths or illuminating architectural details. The source is recessed for greater visual comfort. Color rendering index CRI > 90. Oceano is equipped with IdroSkud® system to protect electronic components from voltage spikes, polarity reversal and water infiltration. There are optionals for anti-glare (honeycomb and louvre) and installation accessories (draining and waterproof outercase and spring for ceiling attachment). The product must be combined with a power supply to ensure its operation. The power supply must be ordered separately. The amount of luminaires that can be connected to a single power supply varies depending on the type of installation. It is up to the installer to verify the possible voltage drop by evaluating the distance between the product and the power supply.

MIZAR is a brand of REER SPA
Via Carcano 32 - 10153 - Torino, Italy
Tel: +39 011 9969833 - Mail: info@mizar.it - www.mizar.it

## Lighting data

| | |
|---|---|
| Source type | single chip power LED |
| CCT | 4000K |
| CRI | > 90 |
| MacAdam (SDCM) | 2 |
| Source lumen output (lm) | 236 |
| Luminaire lumen output (lm) | 144 |
| Light emission | Wide |
| Beam angle | 40° |

| | |
|---|---|
| Photobiological risk | RG0 |
| ULR | 100.00% |
| BUG Rating | B0 U1 G0 |
| CIE Flux Code | 0 0 0 0 100 |
| LED lifetime | L80 B10 50.000h |
| Efficiency class | This product contains a light source of energy efficiency class (EU2019/2015): F |

## Mechanical data

| | |
|---|---|
| Width (mm) | 60 |
| Length (mm) | 60 |
| Height (mm) | 93 |
| Weight (g) | 293 |
| IP Rating | IP66 / IP68 10m |
| IK rating | IK10 |
| Shape | Square |
| Finishing colour | Aluminium / Aluminium |
| Frame material | Anodized 20u aluminum anticorodal 6082, Anodized 20u aluminum anticorodal 6082 |
| Body material | Anodized 20u aluminum anticorodal 6082 |
| External screws material | Stainless steel 316L (A4) |
| Diffuser material | Extraclear tempered glass |

| | |
|---|---|
| Diffuser thickness (mm) | 8 |
| Class ISO 9223 | C5 |
| Optic type | Technopolymer TIR Lens |
| Optical optional | Honeycomb |
| Maximal working temperature | +50° C |
| Minimal working temperature | -20° C |
| Maximal static load (kN) | 5 |
| Walk-over | Yes |
| Driver-over | No |
| Maximal surface temperature | +50° C |
| Areas EN 60598-2-13 | A1 / A2 |

## Electrical data

| | |
|---|---|
| Nominal power (W) | 3 |
| Power supply (input power type) | Costant voltage - 24V |
| Ballast | Remote |
| Insulation class | III |
| Dimmable | Yes |
| Power cable type | H05RN - F 2x0,75 mm² |
| Power cable length | 10 m (verify voltage drop) |

| | |
|---|---|
| Electrical connection | Parallel connection |
| Idroskud® protection | Yes |
| Inverse polarity protection | Yes |
| Voltage spikes protection | Yes |

## Photometry

**40°**

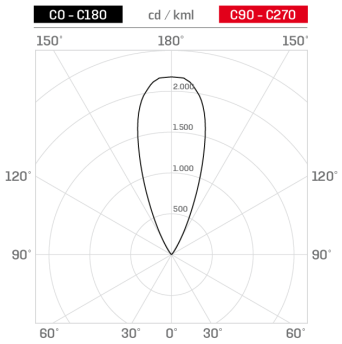


## Technical drawing

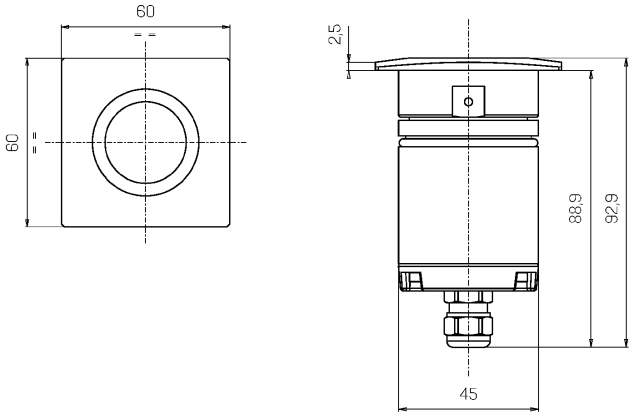


## Accessories

**DRAINING OUTERCASE**

Outercase draining OCEANO 3

Cod: CEAZZZ006

**SLIM DRAINING OUTERCASE**

Outercase draining slim OCEANO 3

Cod: CEAZZZ007

**SLIM WATER-PROOF OUTERCASE**

Outercase waterproof slim OCEANO 3

Cod: CEAZZZ008

**NOT DIMMABLE POWER SUPPLY**

Power supply 220/240 50/60Hz ON/OFF 24V 14,4W IP67

Cod: MID0019

**NOT DIMMABLE POWER SUPPLY**

Power supply 220/240 50/60Hz ON/OFF 24V 36W IP67

Cod: MID0020

**DIMMABLE POWER SUPPLY**

Power supply 220/240 50/60Hz 24V 24W IP67 DALI

Cod: MID0021

**SPRING FOR CEILING MOUNTING**

Spring for ceiling mounting OCEANO 3

Cod: CEAZZZ018

MIZAR is a brand of REER SPA
Via Carcano 32 - 10153 - Torino, Italy
Tel: +39 011 9969833 - Mail: info@mizar.it - www.mizar.it